UNI-T®

UT61A/B/C/D/E
Operating Manual

Modern Digital Multimeters

P/N:110401104786X

Table of Contents

Title	Page
Overview	4
Unpacking Inspection	5
Safety Information	6
Rules For Safe Operation	7
International Electrical Symbols	9
The Meter Structure	10
Rotary Switch	11
Functional Buttons	12
Display Symbols	13
Measurement Operation	15
A.DC/AC Voltage Measurement	15
B.DC/AC Current Measurement	18
C.Measuring Resistance	21
D.Testing for Continuity	24
E.Testing Diodes	26
F.Capacitance Measurement	29
G.Frequency Measurement	31
H.Temperature Measurement	33

Title Page
I.Transistor hFE Measurement 35
J.EF Function 37
Operation of Hold Mode 38
RANGE Button 39
MAX MIN Button 39
PEAK Button 39
Data Outputting 40
The Use of Relative Value Mode 40
The BLUE Button 41
Turning on the Display Backlight 41
Sleep Mode 41
General Specifications 42
Accuracy Specifications 43
A.DC Voltage 44
B.AC Voltage 46
C.DC Current 49
D.AC Current 52
E.Resistance 55

Title Page
F.Capacitance 57
G.Frequency 59
H.Diode Test 60
I.Continuity Test 60
J.Temperature 61
K.Transistor hFE 62
Maintenance 62
A.General Service 62
B.Replacing the Battery 63
C.Replacing the Fuses 65
USB and RS232C Serial Port 67

Overview

This Operating Manual covers information on safety and cautions. Please read the relevant information carefully and observe all the Warnings and Notes strictly.

⚠ Warning

To avoid electric shock or personal injury, read the Safety Information" and "Rules for Safety Operation" carefully before using the Meter.

Digital Multimeter **Model UT61A, UT61B, UT61C. UT61D (True RMS) and UT61E (True RMS)** (hereafter referred to as "the Meter") is an auto ranging multimeter. The enclosure structure design adopted advanced "co-injection" technique in order to provide sufficient insulation.

The Meter can measure AC/DC Voltage and Current, Resistance, Diode, Continuity Buzzer, Capacitance, Frequency, Temperature (°C or °F) , hFE and EF Function, In addition to the conventional measuring functions, there is a RS232C or USB standard serial port, data hold, relative mode, peak measurement, low battery display, display backlight and sleep mode.

Except where noted, the descriptions and instructions in this Operating Manual apply to all Model UT61A/UT61B/UT61C/UT61D/UT61E.

Unpacking Inspection

Open the package case and take out the Meter. Check the following items carefully to see any missing or damaged part:

Item	Description	Qty
1	Operating Manual	1 piece
2	Test Lead	1 pair
3	Point Contact K type Temperature Probe (UT61B and UT61C only)	1 piece
4	UT61 Multi-Purpose Socket	1 piece
5	9V Battery (NEDA1604, 6F22 or 0006P) (installed inside the Meter)	1 piece
6	RS232C Interface Cable(except UT61A)	1 piece
7	USB Interface Cable (Optional at extra cost) (except UT61A)	1 piece
8	Installation Guide & Computer Interface Software (CD-ROM) (Come along with the RS232C or USB Interface Cable) (except UT61A)	1 piece

In the event you find any missing or damage, please contact your dealer immediately.

Safety Information

This Meter complies with the standards IEC61010: in pollution degree 2, overvoltage category (CAT. III 1000V, CAT. IV 600V) and double insulation.

CAT III: Distribution level, fixed installation, with smaller transient overvoltages than CAT. IV.

CAT IV: Primary supply level, overhead lines, cable systems etc.

Use the Meter only as specified in this operating manual, otherwise the protection provided by the Meter may be impaired.

In this manual, a Warning identifies conditions and actions that pose hazards to the user, or may damage the Meter or the equipment under test.

A Note identifies the information that user should pay attention on.

International electrical symbols used on the Meter and in this Operating Manual are explained on page9.

Rules For Safe Operation

⚠ Warning

To avoid possible electric shock or personal injury, and to avoid possible damage to the Meter or to the equipment under test, adhere to the following rules:

- Before using the Meter inspect the case. Do not use the Meter if it is damaged or the case (or part of the case) is removed. Look for cracks or missing plastic. Pay attention to the insulation around the connectors.
- Inspect the test leads for damaged insulation or exposed metal. Check the test leads for continuity. Replace damaged test leads with identical model number or electrical specifications before using the Meter.
- Do not apply more than the rated voltage, as marked on the Meter, between the terminals or between any terminal and grounding.
- The rotary switch should be placed in the right position and no any changeover of range shall be made during measurement is conducted to prevent damage of the Meter.
- When the Meter working at an effective voltage over 60V in DC or 30V rms in AC, special care should be taken for there is danger of electric shock.

- Do not use or store the Meter in an environment of high temperature, humidity, explosive, inflammable and strong magnetic field. The performance of the Meter may deteriorate after dampened.
- When using the test leads, keep your fingers behind the finger guards.
- Disconnect circuit power and discharge all high-voltage capacitors before testing resistance, continuity and diodes.
- Before measuring current, check the Meterís fuses and turn off the current to be tested before connecting the Meter to the circuit. After connecting the circuit reliably, turn the current to be tested on.
- Replace the battery as soon as the battery indicator appears. With a low battery, the Meter might produce false readings that can lead to electric shock and personal injury.
- When servicing the Meter, use only the same model number or identical electrical specifications replacement parts.
- The internal circuit of the Meter shall not be altered at will to avoid damage of the Meter and any accident.
- Soft cloth and mild detergent should be used to clean the surface of the Meter when servicing. No abrasive and solvent should be used to prevent the surface of the Meter from corrosion, damage and accident.
- The Meter is suitable for indoor use.

- Turn the Meter off when it is not in use and take out the battery when not using for a long time.
- Constantly check the battery as it may leak when it has been using for some time, replace the battery as soon as leaking appears. A leaking battery will damage the Meter.

International Electrical Symbols

≂	AC or DC	⏚	Grounding
⧈	Double Insulated		Deficiency of Built-In Battery
⚠	Warning. Refer to the Operating Manual	CE	Conforms to Standards of European Union

The Meter Structure (see figure 1)

① LCD Display
② Functional Buttons
③ Blue button
④ Rotary Switch
⑤ Input Terminal:

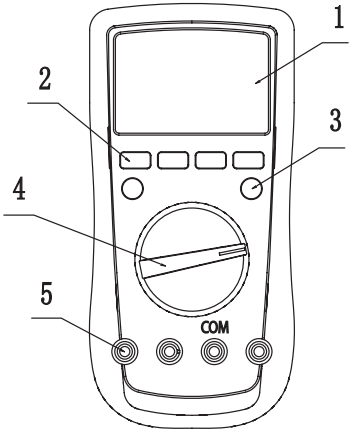

figure 1

Rotary Switch

Below table indicated for information about the rotary switch positions.

V≅ mV≅	AC and DC Voltage Measurement
V~	AC Voltage Measurement (UT61D only)
V⎓	DC Voltage Measurement (UT61D only)
Ω	Resistance Measurement
⊣▶⊢	Diode Test
•)))	Continuity Test
⊣⊢	Capacitance Test
Hz %	Frequency and Duty Cycle Test
℃	Temperature in Celsius (UT61B and UT61C only)
℉	Temperature in Fahrenheit (UT61B and UT61C only)
hFE	Transistor (UT61A only)
μA ≈	DCA and ACA Measurement
mA ≈	DCmA and ACmA Measurement
10A ≈	10A DC and AC Measurement
EF	Sensor Test (UT61A only)
OFF	Power off

Functional Buttons

Below table indicated for information about the functional button operations.

Button	Operation Performed
LIGHT (UT61A, UT61B, UT61C and UT61D only)	Press and hold for 2 serconds to turn the display backlight on or off.
Hold	Press to enter or exit data hold mode.
BLUE Button	Press to select the alternate feature
RANGE	● Press RANGE to enter the manual ranging mode; the Meter beeps. ● Press RANGE to step through the ranges available for the selected function; the Meter beeps. ● Press and hold RANGE for 2 seconds to return to autoranging; the Meter beeps
MAX/MIN (UT61A, UT61B, UT61C and UT61D only)	Press to select the maximum and minimum value.
REL Δ	● Press to enter REL mode. ● Press again to exit REL mode ● For Model UT61C, UT61C and Press and hold for over 2 seconds to enter or exit RS232C or USB mode.
PEAK (UT61E only)	● Press to step the display through Pmax and Pmin readings. ● Press and hold for 2 seconds to exit Peak mode. ● "CAL" means the meter enter self-calibration mode.

Display Symbols

No	Symbol	Meaning
1	H	Data hold is active.
2		Sleep Mode indicator
3	—	Indicates negative reading.
4	AC	Indicator for AC measurement
5	DC	Indicator for DC measurement
6	AUTO	The Meter is in the auto range mode in which the Meter automatically selects the range with the best resolution.
7	MANU	Indicator for manual ranging mode.
8	OL	The input value is too large for the selected range.
9	hFE	Transistor testing indicator
10		Test of diode
11		The continuity buzzer is on.
12	MAX/MIN	Maximum and Minimum reading.
13	S	Data output is in progress
14		The battery is low. ⚠ Warning: To avoid false readings, which could lead to possible electric shock or personal injury, replace the battery as soon as the battery indicator appears.
15	EF	Sensor test is in progress

No	Symbol	Meaning
16	Δ	The REL is on to display the stored value minus the present value.
17	Ω , kΩ ,MΩ	Ω: Ohm. The unit of resistance.
		kΩ: kilohm. 1 x 10^3 or 1000 ohms.
		MΩ: Megaohm. 1 x 10^6 or 1,000,000 ohms.
	mV,V	V: Volts. The unit of voltage.
		mV: Millivolt. 1 x 10^{-3} or 0.001 volts.
	μA,mA,A	A: Amperes (amps). The unit of current.
		mA: Milliamp. 1 x 10^{-3} or 0.001 amperes
		μA : Microamp. 1x 10^{-6} or 0.000001 amperes
	nF, μF,mF	F: Farad. The unit of capacitance.
		μF : Microfarad. 1 x 10^{-6} or 0.000001 farads.
		nF : Nanofarad. 1 x 10^{-9} or 0.000000001 farads.
	℃ , ℉	℃: Centigrade. The unit of temperature.
		℉: Fahrenheit. The unit of temperature.
	Hz,kHz,MHz	Hz: Hertz. The unit of frequency in cycles/second.
		kHz: Kilohertz. 1 x 10^3 or 1,000 hertz.
		MHz: Megahertz. 1 x 10^6 or1,000,000 hertz.
	β	The unit of transistor

Measurement Operation

A. DC/AC Voltage Measurement (See figure 2)

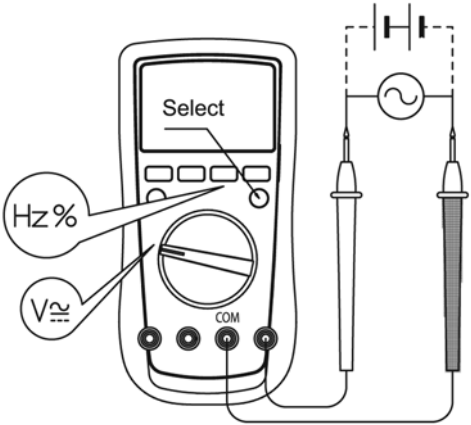

figure 2

⚠ Warning

To avoid harms to you or damages to the Meter from electric shock, please do not attempt to measure voltages higher than 1000V although readings may be obtained.

When measuring high voltage, take extra care to avoid electric shock.

1. Insert the red test lead into the V terminal and the black test lead into the COM terminal.
2. Set the rotary switch to V; DC measurement is default or press BLUE button to switch between DC and AC measurement mode.
3. Connect the test leads across with the object being measured. The measured value shows on the display.
   UT61A, UT61B and UT61C: display effective value of sine wave (mean value response).

   UT61D and UT61E: display true rms value. If online frequency and duty cycle values are needed at this moment, only press Hz/% button to obtain relative data. However input amplitude concerning these two aspects should follow requirements as below:

- Input Amplitude: (DC electric level is zero)
- Input Amplitude: ⩾range×30%
- Frequency respouse:UT61A and B ⩽ 400Hz
  UT61C,UT61D and UT61E ⩽ 1kHz

Note

- In each range, the Meter has an input impedance of 10MΩ except mV range which input impedance is 3000MΩ. This loading effect can cause measurement errors in high impedance circuits. If the circuit impedance is less than or equal to 10kΩ, the error is negligible (0.1% or less).
- For UT61A and UT61B:When measuring mV, you must press RANGE manually to enter mV range.
- When voltage measurement has been completed, disconnect the connection between the testing leads and the circuit under test, and remove the testing leads away from the input terminals of the Meter.

B. DC/AC Current Measurement (See figure 3)

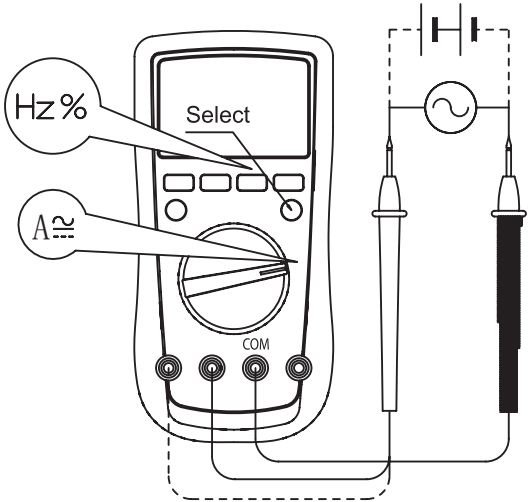

figure 3

⚠ Warning

Before connecting the Meter to the return circuit to be tested, cut off the current of the return circuit.

If the fuse burns out during measurement, the Meter may be damaged or the operator himself may be hurt.

Use proper terminals, function, and range for the measurement.

When the testing leads are connected to the current terminals, do not parallel them across any circuit.

To measure current, do the following:

1. Insert the red test lead into the μmA or A input terminal and the black test lead into the COM terminal.
2. Set the rotary switch to μA, mA, or A.
3. The Meter defaults to DC current measurement mode. To toggle between DC and AC current measurement function, press BLUE button.
4. Connect the test lead in serial to the return circuit to be tested. The measured value shows on the display.

UT61A, UT61B and UT61C: display effective value of sine wave (mean value response).
UT61D and UT61E: display true rms value.

5. Press Hz% to obtain the frequency and duty cycle value.
   - Input Amplitude: (DC electric level is zero)
   - Input Amplitude: ≥range × 30%
   - Frequency response: UT61A and B ≤ 400Hz
     UT61C , UT61D and UT61E ≤ 1kHz

Note

- If the value of current to be measured is unknown, use the maximum measurement position, and reduce the range step by step until a satisfactory reading is obtained.
- For safety sake, each measurement time for >5A current should be less than 10 seconds and the interval time between 2 measurements should be greater than 15 minutes.
- When current measurement has been completed, disconnect the connection between the testing leads and the circuit under test, and remove the testing leads away from the input terminals of the Meter.

C. Measuring Resistance (See figure 4)

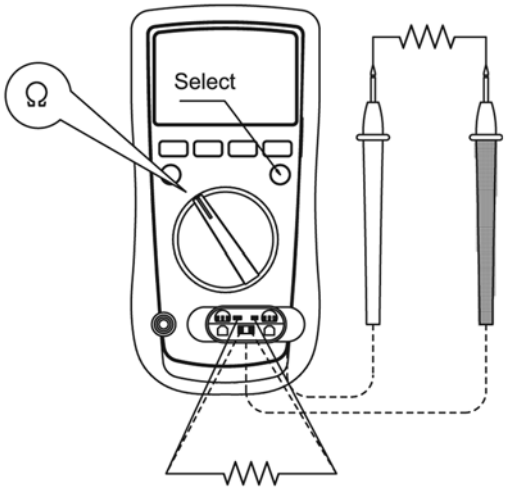

figure 4

⚠Warning

To avoid damages to the Meter or to the devices under test, disconnect circuit power and discharge all the high-voltage capacitors before measuring resistance.

To avoid harm to yourself, do not input higher than DC 60V or AC 30V voltages.

To measure resistance, connect the Meter as follows:

1. Insert the red test lead into the Ω terminal and the black test lead into the COM terminal.
2. Set the rotary switch to Ω resistance measurement (Ω) is default or press BLUE button to select Ω measurement mode.
3. Connect the test leads across with the object being measured. If there is lead on the resistor or SMT resistor, it is more convenience to use the included multi-purpose socket to carry out testing.The measured value shows on the display.

Note

- The test leads can add 0.2Ω to 0.5 Ω of error to resistance measurement. To obtain precision readings in low-resistance measurement, short-circuit the input terminals beforehand, using the relative measurement function button **REL**Δ to automatically subtract the value measured when the testing leads are short-circuited from the reading.

- If Ω reading with shorted test leads is not ≤ 0.5Ω, check for loose test leads or other reasons.

- For high-resistance measurement (>1MΩ), it is normal to take several seconds to obtain a stable reading. To obtain stable reading, use test lead as short as possible or use the included multi-purpose socket to carry out measurement.

- The LCD displays **OL** indicating open-circuit for the tested resistor or the resistor value is higher than the maximum range of the Meter.

- When resistance measurement has been completed, disconnect the connection between the testing leads and the circuit under test, and remove the testing leads away from the input terminals of the Meter.

D. Testing for Continuity (See figure 5)

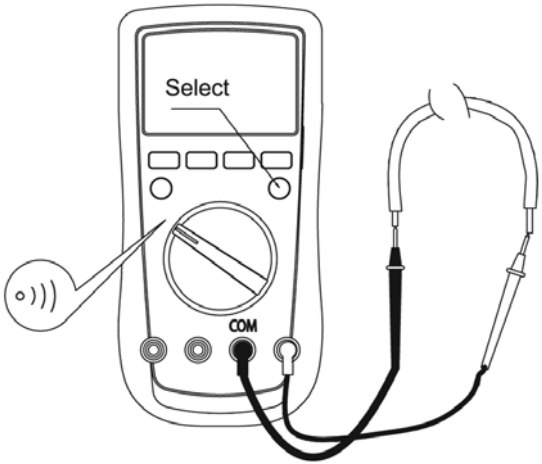

figure 5

⚠ Warning

To avoid damages to the Meter or to the devices under test, disconnect circuit power and discharge all the high-voltage capacitors before testing for continuity.

To avoid harm to yourself, do not input higher than DC 60V or AC 30V voltages.

To test for continuity, connect the Meter as below:

1. Insert the red test lead into the Ω terminal and the black test lead into the COM terminal.
2. Set the rotary switch to •ᵢᵢ) and press BLUE button to select measurement mode.
3. The buzzer sounds continuously if the resistor to be tested is <10Ω.
   The buzzer does not sound if the resistor to be tested is >35Ω

Note

- UT61A, UT61B, UT61C and UT61D: open circuit voltage is around 0.45V
  UT61E: open circuit voltage is around -1.2V
- When continuity testing has been completed, disconnect the connection between the testing leads and the circuit under test, and remove the testing leads away from the input terminals of the Meter.

E. Testing Diodes (See figure 6)

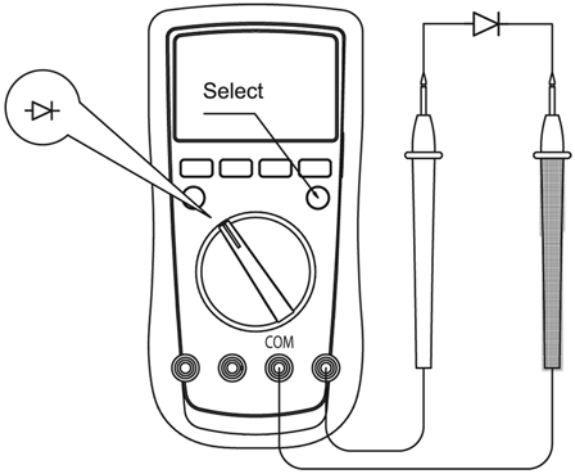

figure 6

⚠ Warning

To avoid possible damage to the Meter and to the device under test, disconnect circuit power and discharge all high-voltage capacitors before testing diodes.

To avoid harm to yourself, do not input higher than DC 60V or AC 30V voltages.

1. Insert the red test lead into the Ω terminal and the black test lead into the **COM** terminal.
2. Set the rotary switch to ⊣⊢ and press **BLUE** button to select ⊣⊢ measurement mode.
3. For forward voltage drop readings on any semiconductor component, place the red test lead on the component's anode and place the black test lead on the component's cathode.The measured value shows on the display.

Note

- In a circuit, a good diode should still produce a forward voltage drop reading of 0.5V to 0.8V; however, the reverse voltage drop reading can vary depending on the resistance of other pathways between the probe tips.

- Connect the test leads to the proper terminals as said above to avoid error display. The LCD will display OL indicating diode being tested is open or polarity is reversed. The unit of diode is Volt (V), displaying the forward voltage drop readings.

- When diode testing has been completed, disconnect the connection between the testing leads and the circuit under test, and remove the testing leads away from the input terminals of the Meter.

F. Capacitance Measurement (See figure 7)

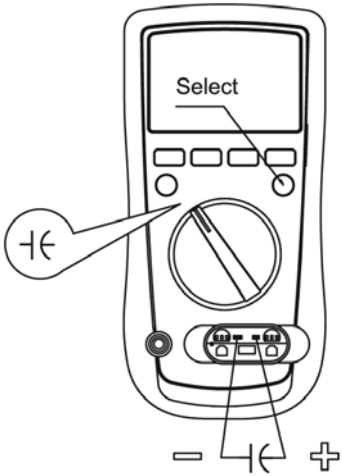

figure 7

⚠ Warning
To avoid damage to the Meter or to the equipment under test, disconnect circuit power and discharge all high-voltage capacitors before measuring capacitance. Use the DC Voltage function to confirm that the capacitor is discharged.

To measure capacitance, connect the Meter as follows:

1. Insert the red test lead into the ⊣⊢ terminal and the black test lead into the COM terminal.
2. Set the rotary switch to ⊣⊢ and press BLUE button to select nF measurement mode.
   - At that time, the Meter will display a fixed value as below which is the Meter internal fixed distributed capacitance value. To ensure accuracy when measuring a small value of capacitance, the tested value must subtract this value, REL mode can help on that.
     UT61A, UT61B, UT61C, UT61D and UT61E: around 10nF
     UT61E: around 50PF
   - For more convenience, use the included multi-purpose socket for measuring capacitor with leads or SMT capacitor. Insert the capacitor to be tested into the corresponding "+" and "-" jack of the multi-purpose socket. This method is more stable and correct for small value of capacitance testing.
3. Connect the test leads across with the object being measured.
   The measured value shows on the display.

Note

- It takes a longer time when the tested capacitor is more than 100uF
- The LCD displays **OL** indicating the tested capacitor is shorted or it exceeds the maximum range.
- When capacitance measurement has been completed, disconnect all the connection between multi-purpose socket, capacitor and the Meter.

G. Frequency Measurement (see figure 8)

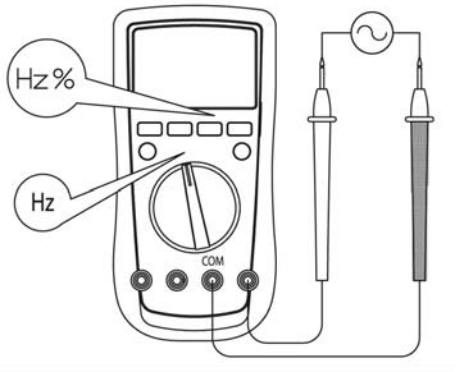

figure 8

⚠ **Warning**

To avoid personal harm, do not attempt to input higher than 30V rms tested frequency voltage

To measure frequency, connect the Meter as follows:

1. Insert the red test lead into the **Hz** terminal and the black test lead into the **COM** terminal.
2. Set the rotary switch to **Hz%**; frequency measurement (Hz**)** is default or press **Hz %** button to select **Hz** measurement mode.
3. Connect the test leads across with the object being measured.
   The measured value shows on the display.
4. If you need to measure duty cycle, press **Hz %** button to select **%** measurement mode

Note

- Input Amplitude: (DC electric level is zero)
  - UT61A, B, C, D: When 10Hz ~ 10MHz: 200mV≤a ≤ 30Vrms
  - UT61E: When 10Hz ~ 10MHz: 300mV ≤ a ≤ 30Vrms
    When ≈10MHz ~ 40MHz: 400mV ≤ a ≤ 30Vrms
    When ≥ 40MHz:unspecified
- For UT61E:Measuring Audio frequency,if the input voltage is more than 15 volt. the meter will simulate the sound in same frequency.

- When frequency measurement has been completed, disconnect the connection between the testing leads and the circuit under test, and remove the testing leads away from the input terminals of the Meter.

H. Temperature Measurement (UT61B and UT61C only) (See figure 9)

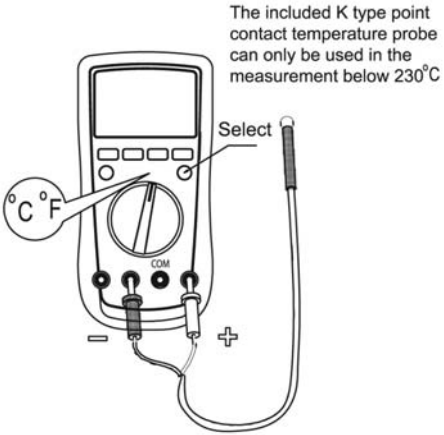

figure 9)

⚠ Warning

To avoid harm to yourself, do not input higher than DC 60V or AC 30V voltages.

To measure temperature, connect the Meter as follows:

1. Set the rotary switch to °C °F.
2. Insert the temperature probe into the input terminal as shown on the figure 9.
3. Place the temperature probe to the object being measured.
   After few seconds, the measured value shows on the display.
4. Press BLUE button to toggle between °C and °F temperature.

Note

- To avoid measurement error especially low temperature measurement, the operating temperature must not exceed 18 ~ 28°C.
- When temperature measurement has been completed, disconnect the connection between the temperature probe and the object being measured, and remove the temperature probe away from the input terminals of the Meter.

I. Transistor hFE Measurement (UT61A only) (See figure 10)

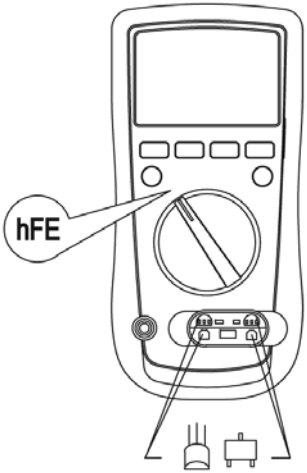

figure 10

1. Set the rotary switch to hFE.
2. Insert the multi-purpose socket into the input terminal as shown on figure 10.
3. Insert the transistor to be tested into the corresponding multi-purpose socket jacks.
4. The LCD display hFE nearest value

Note

- When transistor measurement has been completed, disconnect all the connection between multi-purpose socket, transistor and the Meter.

J. EF Function (UT61A only) (See figure 11)

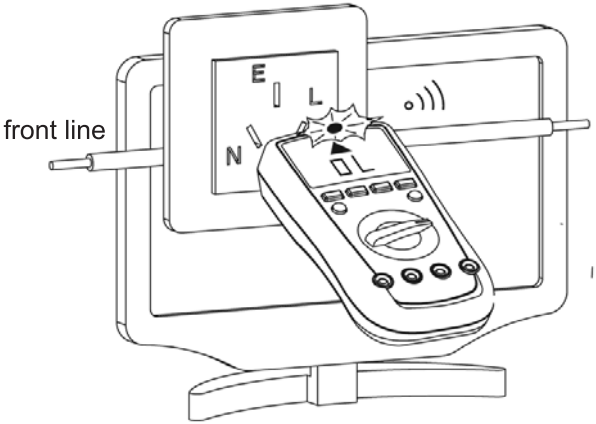

figure 11

To use EF function, connect the Meter as follows:

1. Set the rotary switch to EF and remove the test lead from the input terminals.
2. Place the housing front part with marking ⚠EF towards the object being measured.
3. There will be three types of displays:
   - ➢ LCD displays different size of digits to represent the strength of detected signal.
   - ➢ When the LCD displays OL, the buzzer beeps and the red LED blinks.

Operation of Hold Mode

⚠ Warning

To avoid possibility of electric shock, do not use Hold mode to determine if circuits are without power. The Hold mode will not capture unstable or noisy readings.

The Hold mode is applicable to all measurement functions.

- Press HOLD to enter Hold mode; the Meter beeps.
- Press HOLD again to exit Hold mode; the Meter beeps.
- In Hold mode, H is displayed.

RANGE button

- Press RANGE to enter the manual ranging mode; the Meter beeps.
- Press RANGE to step through the ranges available for the selected function; the Meter beeps.
- Press and hold RANGE for over 2 seconds to return to autoranging; the Meter beeps.

MAX MIN button (UT61A, UT61B, UT61C and UT61D only)

- Press MAX MIN to start recording of maximum and minimum values. Steps the display through high (MAX) and low (MIN) readings. The Meter enters manual ranging mode after pressing MAX MIN button.
- Press and hold MAX MIN for over 2 seconds to exit MAX MIN mode and return to the present measurement range.

PEAK Hold (UT61E only)

- Under voltage and current measurement mode, press PEAK button to enter manual ranging mode and start recording of Pmax and Pmin values. The LCD displays MANU/Pmax.
- Press PEAK again to display MANU/Pmin.
- Press PEAK to step the display through Peak Max and Peak Min readings.
- Press and hold PEAK for over 2 seconds to exit Peak mode, the LCD displays the present measurement values.
- Don't press the "PEAK" Key.If the meter have entered "CAL" mode.

Data Outputting (Except UT61A)

- Press and hold **REL**△ button for over 2 seconds to enter or exit RS232C or USB mode.
- The sleep mode feature will be disabled after entering RS232C or USB mode, the on the LCD will disappear (UT61B and UT61C only).
- If the Meter is carrying out HOLD, MAX/MIN or REL measurement, the LCD will display the corresponding readings but the interface output will still be the random value of the present input terminals measurement.
- For UT61E,Auto entering Data outputting mode.

The Use of Relative Value Mode

The REL mode applies to all measurement functions except frequency/duty cycle measurement. It subtracts a stored value from the present measurement value and displays the result.

For instance, if the stored value is 20.0V and the present measurement value is 22.0V, the reading would be 2.0V. If a new measurement value is equal to the stored value then display 0.0V.

To enter or exit REL mode:

- Press **REL**△ to enter REL mode, and the present measurement range is locked and display“0”as the stored value.
- Press **REL**△ again to reset the stored value and exit REL mode.

The BLUE button
It uses for selecting the required measurement function when there is more than one function at one position of the rotary switch.

Turning on the Display Backlight (UT61A, UT61B, UT61C and UT61D only)

⚠ **Warning**
In order to avoid the hazard arising from mistaken readings in insufficient light or poor vision, please use Display Backlight function.

- Press and hold **HOLD/LIGHT** for over 2 seconds to turn the Display Backlight on.
- The display backlight will automatically off around after 10 seconds.

Sleep Mode (UT61A, UT61B, UT61C and UT61D only)
To preserve battery life, the Meter automatically turn off if you do not turns the rotary switch or press any button for around 15 minutes.

The Meter can be activated by turning the rotary switch or pressing any button.

To disable the Sleep Mode function, press **BLUE** button while turning on the Meter.

General Specifications

- Maximum Voltage between any Terminals and Grounding:
  Refer to the different ranges input protection voltage..
- ⚠Fused Protection for μAmA Input Terminal:1A H 240V ϕ6x25mm.
- ⚠Fused Protection for 10A Input Terminal:10A H 240V ϕ6x25mm.
- Display
  - UT61A and UT61B:Maximum reading 4000 (frequency 9999), analogue bar graph 41 segments
  - UT61C and UT61D:Maximum reading 6000 (frequency 9999), analogue bar graph 61 segments.
  - UT61E:Maximum reading 22000, analogue bar graph 46 segments
- Measurement Speed: Updates 2~3 times/second.
- Range: Auto or Manual
- Polarity Display: Auto
- Overload indication: Display OL
- Battery Deficiency: Display

- Temperature:
  - Operating: 0°C to +40°C (32°Fto +104 °F).
  - Storage: -10°C to +50°C (14 °F to +122°F).
- Relative Humidity:
  - ≤75% @ 0°C ~ 30°C below
  - ≤50% @ 30 - 40°C.
- Battery Type: One piece of 9V (NEDA1604 or 6F22 or 006P).
- Under the influence of radiated Radio-Frequency electromagnetic Field phenomenon, the captioned model have a measurement error, it will be back to normal when the interference is removed
- Dimensions (HxWxL):180 x 87 x 47 mm.
- Weight:Approximate 370g (battery included).
- Safety/Compliances:
  IEC61010 CAT.III 1000V, CAT.IV 600V overvoltage and double insulation standard.
- Certifications: CE .

Accuracy Specifications

Accuracy ± a% reading + b digits guarantee for 1 year.
Operating temperature 18°C~28°C.
Relative humidity <75%.

A. DC Voltage

UT61A and UT61B

<table>
<tr><th rowspan="2">Range</th><th rowspan="2">Resolution</th><th colspan="2">Accuracy</th><th rowspan="2">Input Impedance</th><th rowspan="2">Fixed Value Input</th></tr>
<tr><th>UT61A</th><th>UT61B</th></tr>
<tr><td>40mV</td><td>0.01mV</td><td></td><td>±(0.8%+3)</td><td rowspan="2">Around >3000MΩ</td><td rowspan="7">1000V dc / 750V ac</td></tr>
<tr><td>400mV</td><td>0.1mV</td><td colspan="2">±(0.8%+3)</td></tr>
<tr><td>4V</td><td>0.001V</td><td colspan="2" rowspan="3">±(0.5%+1)</td><td rowspan="4">Around 10MΩ</td></tr>
<tr><td>40V</td><td>0.01V</td></tr>
<tr><td>400V</td><td>0.1V</td></tr>
<tr><td>1000V</td><td>1V</td><td colspan="2">±(1.0%+3)</td></tr>
</table>

UT61C and UT61D

Range	Resolution	Accuracy	Input Impedance	Fixed Value Input
60mV	0.01mV	±(0.8%+3)	Around >3000MΩ	1000V dc / 750V ac
600mV	0.1mV	±(0.8%+3)		
6V	0.001V	±(0.5%+1)	Around 10MΩ	
60V	0.01V			
600V	0.1V			
1000V	1V	±(1.0%+3)		

UT61E

Range	Resolution	Accuracy	Input Impedance	Fixed Value Input
220mV	0.01mV	±(0.1%+5)	Around >3000MΩ	1000V dc / 750V ac
2.2V	0.0001V	± (0.1%+2)	Around 10MΩ	
22V	0.001V			
220V	0.01V			
1000V	0.1V	±(0.1%+5)		

B. AC Voltage
UT61A and UT61B

<table>
<tr><th rowspan="2">Range</th><th rowspan="2">Resolution</th><th colspan="2">Accuracy
45~400Hz</th><th rowspan="2">Input
Impedance</th><th rowspan="2">Fixed
Value
Input</th></tr>
<tr><th>UT61A</th><th>UT61B</th></tr>
<tr><td>40mV</td><td>0.01 V</td><td></td><td>±(1.2%+5)</td><td rowspan="2">Around
>3000MΩ</td><td rowspan="6">1000V
dc /
750V ac</td></tr>
<tr><td>400mV</td><td>0.1mV</td><td colspan="2" rowspan="4">±(1.0%+3)</td></tr>
<tr><td>4V</td><td>0.001V</td><td rowspan="4">Around 10MΩ</td></tr>
<tr><td>40V</td><td>0.01V</td></tr>
<tr><td>400V</td><td>0.1V</td></tr>
<tr><td>750V</td><td>1V</td><td colspan="2">±(1.2%+5)</td></tr>
</table>

- Displays effective value of sine wave. mV range is applicable from 5% of range to 100% of range.

UT61C and UT61D

Range	Resolution	Accuracy			Input Impedance	Fixed Value Input
		UT61C	UT61D			
		45~1kHz	45~1kHz	>1kHz~3kHz		
60mV	0.01mV	±(1.2%+5)	±(1.2%+5)	±(2.0%+5)	Around >3000MΩ	1000V dc / 750V ac
600mV	0.1mV					
6V	0.001V	±(1.0%+3)	±(1.0%+3)	±(1.5%+5)	Around 10MΩ	
60V	0.01V					
600V	0.1V					
750V	1V	±(1.2%+5)	±(1.2%+5)	±(3.0%+5)		

- UT61C:
  Displays effective value of sine wave. mV range is applicable from 5% of range to 100% of range.
- UT61D:
  - True RMS is applicable from 10% of range to 100% of range.
  - AC crest factor can be up to 3.0 except 1000V where it is 1.5.
  - A residual reading of 10 digits with test leads shorted, will not affect stated accuracy.

UT61E

Range	Resolution	Accuracy		Input Impedance	Fixed Value Input
		45~1kHz	>1kHz~10kHz		
220mV	0.01mV	±(1.0%+10)	±(1.5%+50)	Around >3000MΩ	1000V dc / 750V ac
2.2V	0.0001V	±(0.8%+10)	±(1.2%+50)	Around 10MΩ	
22V	0.001V				
220V	0.01V		±(2.0%+50)		
750V	0.1V	±(1.2%+10)	±(3.0%+50)		

- True RMS is applicable from 10% of range to 100% of range.
- AC crest factor can be up to 3.0 except 1000V where it is 1.5.
- A residual reading of 10 digits with test leads shorted, will not affect stated.

C. DC Current

UT61A and UT61B

Range	Resolution	Accuracy	Overload Protection
400μA	0.1μA	(1.0%+2)	Fuse 1: F1A H 240V(CE), Φ6 x 25mm
4000μA	1μA		
40mA	0.01mA	(1.2%+3)	
400mA	0.1mA		
4A	0.001A	(1.5%+3)	Fuse 2: F10A H 240V (CE), Φ6 x 25mm
10A	0.01A		

Remarks:

- When ≤5A: Continuous measurement is allowed.
- When ＞5A: Continuous measurement less than 10 seconds at an interval more than 15 minutes.

UT61C and UT61D

Range	Resolution	Accuracy	Overload Protection
600μA	0.1μA	(1.0%+3)	Fuse 1: F1A H 240V (CE), Φ6 x 25mm
6000μA	1μA		
60mA	0.01mA		
600mA	0.1mA		
6A	0.001A	(1.2%+5)	Fuse 2: F10A H 240V (CE), Φ6 x 25mm
10A	0.01A		

Remarks:

- When ≤5A: Continuous measurement is allowed.
- When >5A: Continuous measurement less than 10 seconds at an interval more than 15 minutes.

UT61E

Range	Resolution	Accuracy	Overload Protection
220μA	0.01μA	(0.5%+10)	Fuse 1: F1A H 240V (CE), Φ6 x 25mm
2200μA	0.1μA		
22mA	0.001mA		
220mA	0.01mA		
10A	0.001A	(1.2%+50)	Fuse 2: F10A H 240V (CE), Φ6 x 25mm

Remarks:

- When ≤5A: Continuous measurement is allowed.
- When >5A: Continuous measurement less than 10 seconds at an interval more than 15 minutes.

D. AC Current

UT61A and UT61B

Range	Resolution	Accuracy 45Hz~400Hz	Overload Protection
400μA	0.1μA	(1.2%+5)	Fuse 1: F1A H 240V (CE), Φ6 x 25mm
4000μA	1μA		
40mA	0.01mA	(1.5%+5)	
400mA	0.1mA		
4A	0.001A	(2.0%+5)	Fuse 2: F10A H 240V (CE), Φ6 x 25mm
10A	0.01A		

Remarks:

- When ≤5A: Continuous measurement is allowed.
- When >5A: Continuous measurement less than 10 seconds at an interval more than 15 minutes.
- Displays effective value of sine wave.

UT61C and UT61D

Range	Resolution	Accuracy			Overload Protection
		UT61C	UT61D		
		45~1kHz	45~1kHz	>1kHz~3kHz	
600μA	0.1μA	(1.2%+5)	(1.2%+5)	(1.5%+5)	Fuse 1: F1A H 240V (CE), Φ6 x 25mm
6000μA	1μA				
60mA	0.01mA	(1.5%+5)	(1.5%+5)	(2.0%+5)	
600mA	0.1mA				
6A	0.001A	(2.0%+5)	(2.0%+5)	(3.0%+5)	Fuse 2: F10A H 240V (CE), Φ6 x 25mm
10A	0.01A				

Remarks:

- When ≤5A: Continuous measurement is allowed.
- When ＞5A: Continuous measurement less than 10 seconds at an interval more than 15 minutes.
- UT61C:Displays effective value of sine wave.
- UT61D:
  - True RMS is applicable from 10% of range to 100% of range.
  - AC crest factor can be up to 3.0 except 1000V where it is 1.5.
  - A residual reading of 10 digits with test leads shorted, will not affect stated accuracy.

UT61E

Range	Resolution	Accuracy		Overload Protection
		45~1kHz	>1kHz~10kHz	
220μA	0.01μA	(0.8%+10)	(1.2%+50)	Fuse 1: F1A H 240V (CE), Φ6 x 25mm
2200μA	0.1μA			
22mA	0.001mA	(1.2%+10)	(1.5%+50)	
220mA	0.01mA			
10A	0.001A	(1.5%+10)	>1kHz~ 5kHz	Fuse 2: F10A H 240V (CE), Φ6 x 25mm
			(2.0%+50)	

Remarks:

- When ≤5A: Continuous measurement is allowed.
- When >5A: Continuous measurement less than 10 seconds at an interval more than 15 minutes.
- True RMS is applicable from 10% of range to 100% of range.
- AC crest factor can be up to 3.0 except 1000V where it is 1.5.
- A residual reading of 10 digits with test leads shorted, will not affect stated.

E. Resistance

UT61A and UT61B

Range	Resolution	Accuracy	Overload Protection	Remark
400Ω	0.1Ω	±(1.2%+2)	1000V dc / 750V ac	When measuring below 2kΩ, apply REL △ to ensure measurement accuracy.
4kΩ	0.001kΩ	±(1.0%+2)		
40kΩ	0.01kΩ			
400kΩ	0.1kΩ			
4MΩ	0.001MΩ	±(1.2%+2)		
40MΩ	0.01MΩ	±(1.5%+2)		

UT61C and UT61D

Range	Resolution	Accuracy	Overload Protection	Remark
600Ω	0.1Ω	±(1.2%+2)	1000V dc / 750V ac	When measuring below 2kΩ, apply REL △ to ensure measurement accuracy.
6kΩ	0.001kΩ	±(1.0%+2)		
60kΩ	0.01kΩ			
600kΩ	0.1kΩ			
6MΩ	0.001MΩ	±(1.2%+2)		
60MΩ	0.01MΩ	±(1.5%+2)		

UT61E

Range	Resolution	Accuracy	Overload Protection	Remark
220Ω	0.01Ω	±(0.5%+10)	1000V dc / 750V ac	When measuring below 2kΩ, apply REL Δ to ensure measurement accuracy.
2.2kΩ	0.0001kΩ			
22kΩ	0.001kΩ			
220kΩ	0.01kΩ			
2.2MΩ	0.0001MΩ	±(0.8%+10)		
22MΩ	0.001MΩ	±(1.5%+10)		
220MΩ	0.01MΩ	±(3.0%+50)		

F. Capacitance

UT61A and UT61B

Range	Resolution	Accuracy	Overload Protection	Remark
40nF	0.01nF	±(3.0%+5)	1000V dc / 750V ac	There is around 10nF residual reading when the circuit is open
400nF	0.1nF			
4μF	0.001μF			
40μF	0.01μF			
400μF	0.1μF	±(4.0%+5)		
4000μF	1μF	unspecified		

UT61C and UT61D

Range	Resolution	Accuracy	Overload Protection	Remark
40nF	0.01nF	±(3.0%+5)	1000V dc / 750V ac	There is around 10nF residual reading when the circuit is open
400nF	0.1nF			
4μF	0.001μF			
40μF	0.01μF			
400μF	0.1μF	±(4.0%+5)		
4000μF	1μF	unspecified		

UT61E

Range	Resolution	Accuracy	Overload Protection	Remark
22nF	0.001nF	±(3.0%+5)	1000V dc / 750V ac	There is around 50pF residual reading when the circuit is open. To measure a small value of capacitance, use REL to ensure accuracy.
220nF	0.01nF			
2.2μF	0.0001μF			
22μF	0.001μF			
220μF	0.01μF	±(4.0%+5)		
2.2mF	0.0001mF			
22mF	0.001mF	unspecified		
220mF	0.01mF			

G. Frequency

Model	Range	Accuracy	Maximum Resolution
UT61A, B, C, D	10Hz~10MHz	(0.1%+4)	0.01Hz
UT61E	10Hz~220MHz	(0.01%+5)	0.001Hz

- Overload Protection: 1000Vdc/750V ac
- Input Amplitude: (DC electric level is zero)
  - UT61A, B, C, D:
    When 10Hz ~ 10MHz: 200mV ≤a ≤ 30Vrms
  - UT61E:
    When 10Hz ~ 10MHz: 300mV ≤a ≤ 30Vrms
    When >10MHz ~ 40MHz: 400mV ≤ a ≤ 30Vrms
    When > 40MHz: unspecified
  - When measuring on line frequency or duty cycle under AC Voltage and Current measurement mode, the input amplitude and frequency response must satisfy the following requirement:
    Input amplitude ≥range x 30%
    Frequency response: UT61A and B ≤400Hz
    UT61C, UT61D and UT61E ≤ 1kHz

H. Diode Test

Model	Resolution	Remarks	Overload Protection
UT61A, UT61B, UT61C and UT61D	0.001V	Open circuit voltage around 2.8V	1000Vdc / 750Vac
UT61E	0.0001V		

I. Continuity Test

Model	Resolution	Overload Protection
UT61A, B, C, D	0.1Ω	1000Vdc / 750Vac
UT61E	0.01Ω	

- UT61A, B, C, D:
  - Open circuit voltage is around 0.45V.
  - Broken circuit resistance value is around ＞35Ω, the buzzer does not beep.
  - Good circuit resistance value is ≤10Ω, the buzzer beeps continuously.
- UT61E:
  - Open circuit voltage is around –1.2V.
  - Broken circuit resistance value is around ＞30Ω, the buzzer does not beep.
  - Good circuit resistance value is ≤10Ω , the buzzer beeps continuously.

J. Temperature Measurement (UT61B and UT61C only)

Range	Resolution	Accuracy	Overload Protection
℃	1℃	(-40~-20℃): -(8%+5)	1000Vdc / 750Vac
		(＞-20~0℃): ±(1.2%+4)	
		(＞0~100℃): ±(1.2%+3)	
		(＞100~1000℃): ±(2.5%+2)	
℉	1℉	(-40~4℉): -(8%+6)	
		(＞4~32℉): ±(1.2%+5)	
		(＞32~212℉): ±(1.2%+4)	
		(＞212~1832℉): ±(2.5%+3)	

- Thermocouple:
  It is suitable to use K type thermocouple. The included point contact K type thermocouple can only be used on less than 230℃ temperature measurement.

K. Transistor hFE (Model UT61A only)

Range	Resolution	Remark
hFE	1β	Ibo ≈ 10μA 1000 β MAX

Maintenance

This section provides basic maintenance information including battery and fuse replacement instruction.

⚠ Warning

Do not attempt to repair or service your Meter unless you are qualified to do so and have the relevant calibration, performance test, and service information.

To avoid electrical shock or damage to the Meter, do not get water inside the case.

A. General Service

- Periodically wipe the case with a damp cloth and mild detergent. Do not use abrasives or solvents.
- To clean the terminals with cotton bar with detergent, as dirt or moisture in the terminals can affect readings.
- Turn off the power of the Meter when it is not in use.
- Take out the battery when it is using for a long time.

- Do not use or store the Meter in a place of humidity, high temperature, explosive, inflammable and strong magnetic field.

B. Replacing the Battery

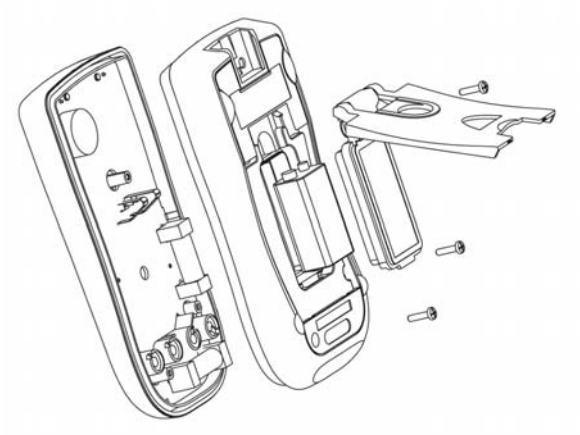

figure 12

⚠ Warning

To avoid false readings, which could lead to possible electric shock or personal injury, replace the battery as soon as the battery indicator "c" appears.

Make sure the test leads are disconnected from the circuit being tested before opening the case bottom.

To replace the battery: (See figure 12)

1. Turn the Meter power off and remove all connections from the terminals.
2. Remove the screw from the tilt stand and the battery compartment and separate the battery compartment and the tilt stand from the case bottom.
3. Remove the battery from the battery compartment.
4. Replace the battery with a new 9V battery (NEDA1604, 6F22 or 006P)
5. Rejoin the tilt stand, battery compartment and case bottom, and reinstall the screw.

C. Replacing the Fuses

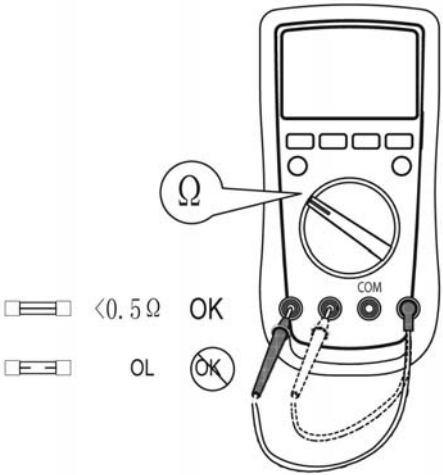

figure 13

⚠ Warning
To avoid electrical shock or arc blast, or personal injury or damage to the Meter, use specified fuses ONLY in accordance with the following procedure.

To test the fuse: (See figure 13)
The Meter does not response when measuring current and transistor hFE, go to inspect the Meter built-in fuses if they are broken.

To replace the Meterís fuse: (See figure 12)

1. Turn the Meter power off and remove all the connections from the terminals.
2. Remove the screw from the tilt stand and the battery compartment and separate the battery compartment and the tilt stand from the case bottom.
3. Remove the two screws from the case bottom, and separate the case top from the case bottom.
4. Remove the fuse by gently prying one end loose, then take out the fuse from its bracket.
5. Install ONLY replacement fuses with the identical type and specification as follows and make sure the fuse is fixed firmly in the bracket.
   A mA range: F1, 1A H 240V, Φ6x25mm (CE)
   10A range: F2, 10A H 240V, Φ6x25 mm. (CE)
6. Rejoin the case bottom and case top, and reinstall the screw.
7. Rejoin the tilt stand, battery compartment and case bottom, and reinstall the screw.

USB Serial Port (UT61B, UT61C , UT61D and UT61E only)
It is optional at extra cost.

END

This operating manual is subject to change without notice.

©Copyright 2008 Uni-Trend Group Limited.
All rights reserved.

Manufacturer:
Uni-Trend Technology (China) Limited
No 6, Gong Ye Bei 1st Road
Songshan Lake National High-Tech Industrial
Development Zone, Dongguan City
Guangdong Province
China
Postal Code:523 808

Headquarters:
Uni-Trend Group Limited
Rm901, 9/F, Nanyang Plaza
57 Hung To Road
Kwun Tong
Kowloon, Hong Kong
Tel: (852) 2950 9168
Fax: (852) 2950 9303
Email: info@uni-trend.com
http://www.uni-trend.com