RoHS Compliant | Customer Drawing

REV.	ECN NO.	DESCRIPTION	DATE	DESIGN

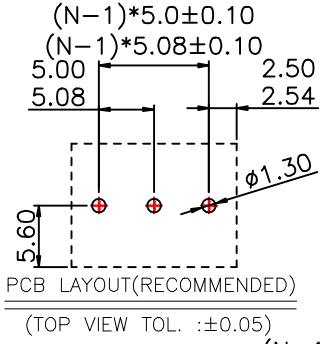

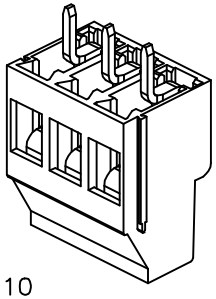

SPECIFICATION

MATERIAL
- Housing:PA66,UL94V-0
- Screw:M3 Steel ,Zinc Plated
- Terminal:Brass,Tin Plated
- Clamp:Brass,Ni Plated

ELECTRICAL
- Rated voltage:300V
- Rated current: 20A
- Wire Range(AWG/MM²):24-12AWG/0.2-4MM²
- Withstanding voltage: AC2000V/ 1Min

MECHANICAL
- Torque:0.5Nm(4.4Lb-In.)
- Strip Length:7mm
- Operating Temperature:-40°C~+105°C

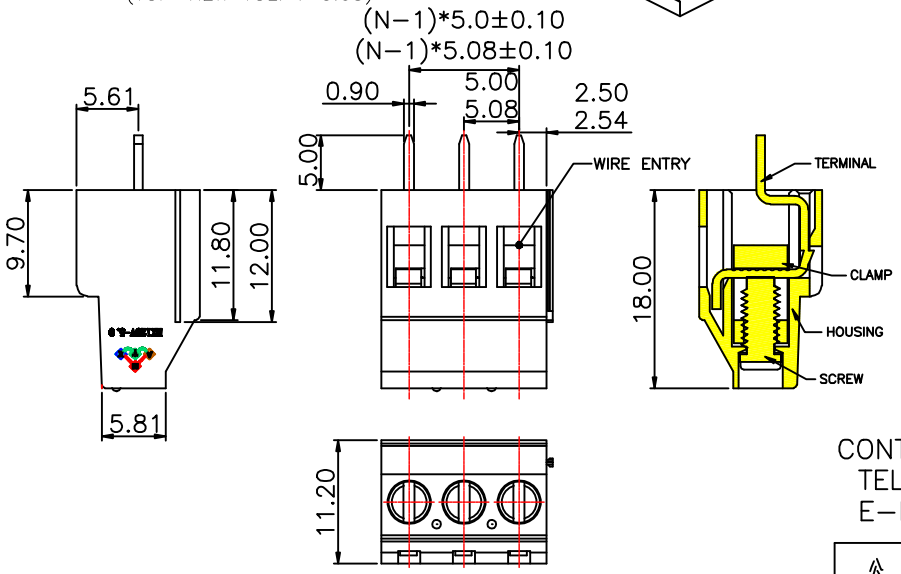

订购方式/HOW TO ORDER

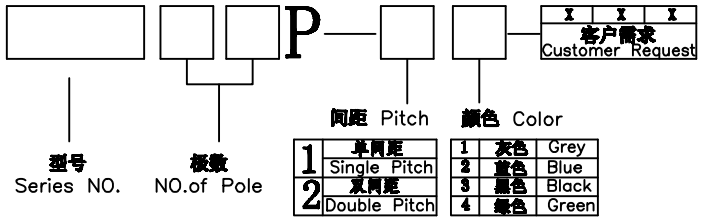

CONTACT WITH US:
TEL:+86−574−63505128 FAX:+86−574−63532183
E−Mail:sales@nbmax.com.cn Website:www.nbmax.com.cn

N=No.of contacts

公差一览表 TOLERANCE UNLESS OTHERWISE				宁波迈科思电子科技有限公司 NINGBO MKX ELECTRONIC TECHNOLOGY CO.,LTD					
X.	±0.25	X°.	±5°	单位 UNITS	mm	制图 DRAWING	陈冬梅	产品名称 TITLE	MX129V−5.0/5.08
.X	±0.20	.X°	±2°	角法 VIEW		设计 DESIGN	顾兴伟		
.XX	±0.15	.XX°	±1°	比例 SCALE	1:1	审核 CHKD		产品料号 PART NO.	MX129V−5.0/5.08
.XXX	±0.02	.XXX°	±0.5°	日期 DATE	2012. 07. 10	版本 VER	A0	核准 APPD		图号 DRAW NO.	MX129V−5.0−A0