File No.	190	SHEET	1/1

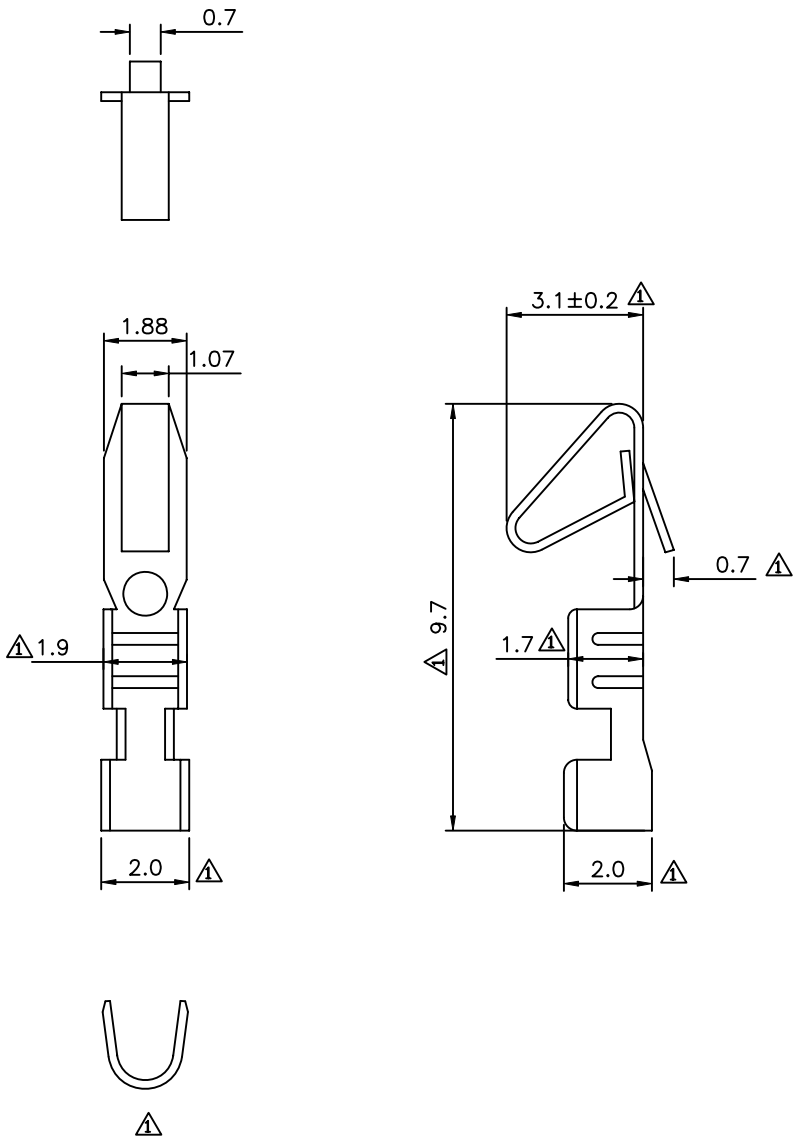

SPECIFICATION

Applicable Wire:AWG #22~30
Material:Brass,Tin Plated
Thickness:0.2mm
Hardness:SH
Q'ty:10000 PCS/Roll
RoHS Compliant

DRAWING No.	APPROVED BY	MEI	UNLESS OTHERWISE SPECIFIED TOLERANCES ARE
01993	CHECKED BY	HZF	.X ±0.38 .XX ±0.25
	DRAWING BY	QQJ	
SCALE NONE	REV.	A1	UNIT mm

NO.	REV.	REVISIONS	CHK	DATE
1	A1	Modify Data	HZF	03/05/2010
0	A0	NEW RELEASE	BECKY	02/14/2006